LOCUS MAP

NOT TO SCALE

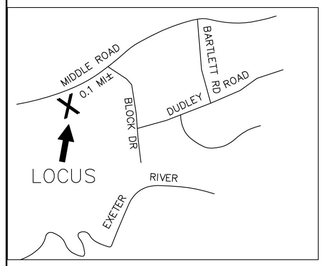

SOIL CLASS: 140 CHATFIELD–HOLLIS–CANTON

(SOURCE: USDA–SCS SOIL SURVEY)

BENCH MARKS: DATUM = ASSUMED

#1 SET HUB ELEV 50.00

#2 SET HUB ELEV 45.39

#3 SET NAIL 48" MAPLE ELEV 50.80

#4 TOP CENTER BULKHEAD FRAME @ HSE EL 49.94

DESIGN INTENT:

1. THE BOTTOM OF THE EFFLUENT DISPOSAL SYSTEM SHALL BE CONSTRUCTED AT ELEVATION 45.7
2. THERE IS/ARE APPROX 0.3 FT BELOW ORIGINAL GROUND ON THE HIGH CONTOUR THE DESIGNED EDS.(EL 46)

SUITABLE REPLACEMENT AREA:

SYSTEM MUST BE REBUILT IN PLACE OR REDESIGNED.

LEGEND:

- 50 — EXISTING CONTOUR
- (50) — PROPOSED CONTOUR
- 50.0 — EXISTING SPOT ELEVATION
- (50.0) — PROPOSED SPOT ELEVATION

NOTES:

1. THIS PLAN IS NOT TO BE CONSTRUED AS A BOUNDARY SURVEY. PROPERTY LINES SHOWN ARE APPROXIMATED BASED ON INFORMATION FROM THE FOLLOWING SOURCE: RCRD 5333–2397 AND TAX MAP
2. WS&PCD SUBDIVISION APPROVAL RCRD 1329–444
   N/A LOT OF RECORD PRE 1967 (1954)
3. THIS SYSTEM IS NOT DESIGNED TO HANDLE GARBAGE DISPOSAL, JACUZZI BATH, OR SEWAGE EJECTOR PUMP WASTE. BACKWASH FROM WATER SOFTENER SYSTEMS SHOULD BE DISCHARGED TO A SEPARATE DRYWELL.
4. a) NO SURFACE WATER WITHIN 75' OF PROPOSED SYSTEM
   b) NO WELLS WITHIN 75'
   c) NO HYDRIC B SOILS WITHIN 75'
   d) NO HYDRIC A SOILS WITHIN 100'
5. DESIGNER MUST BE CONSULTED FOR ANY PROPOSED CHANGES OR ERRORS/DISCREPANCIES FOUND DURING SYSTEM INSTALLATION. (603 929–7404)
   INSTALLER IS RESPONSIBLE FOR ANY TOWN PERMITS OR INSPECTIONS REQUIRED FOR THIS INSTALLATION.

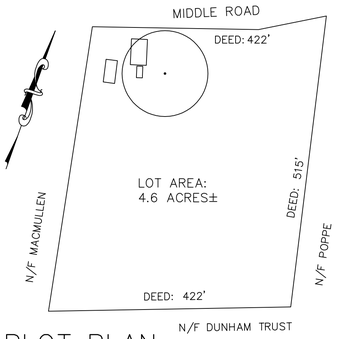

PLOT PLAN

1"= APPROX 125'

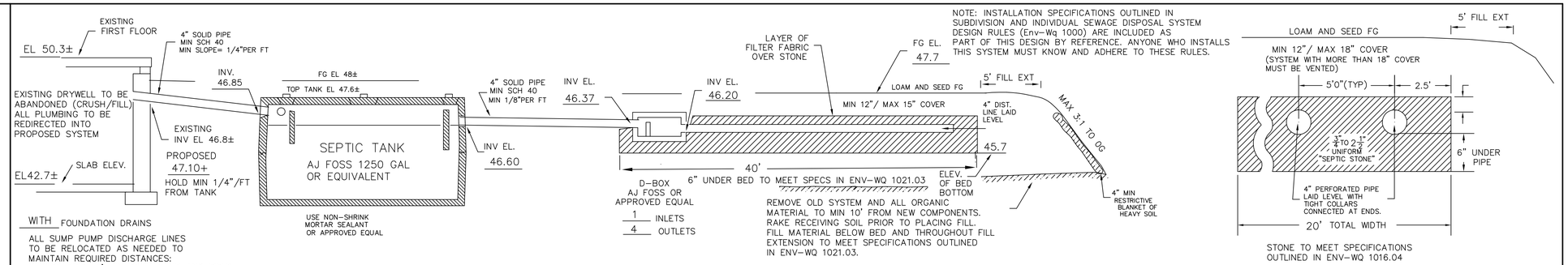

NOTE: INSTALLATION SPECIFICATIONS OUTLINED IN SUBDIVISION AND INDIVIDUAL SEWAGE DISPOSAL SYSTEM DESIGN RULES (Env–Wq 1000) ARE INCLUDED AS PART OF THIS DESIGN BY REFERENCE. ANYONE WHO INSTALLS THIS SYSTEM MUST KNOW AND ADHERE TO THESE RULES.

STONE TO MEET SPECIFICATIONS OUTLINED IN ENV–WQ 1016.04

CROSS SECTION DISPOSAL SYSTEM – NOT TO SCALE

PROPOSED ISDS IS DESIGNED TO SERVICE 1 STRUCTURE WITH DISHWASHER, WASHING MACHINE, TOILETS, AND TUB/SHOWERS. THERE IS NO KNOWN BURIAL SITE OR CEMETERY ON THE LOT OR THE ABUTTING LOT WITHIN 100' OF ANY COMPONENT OF THE ISDS OR WELL.

SUBJECT PROPERTY IS NOT LOCATED WITHIN A FEDERALLY DESIGNATED FLOOD HAZARD ZONE.

NOTE A:

EXACT LOCATION OF WATER LINE FROM HOUSE TO BARN IS UNKNOWN. ONCE FOUND, TO BE RELOCATED IF NEEDED TO MIN 20' FROM LEACH FIELD, OR RELOCATED IF NEEDED TO MIN 10' FROM L.F. AND SLEEVED WHERE WITHIN 20'. WAIVER REQUESTED FOR 20' SETBACK.

PLAN : 1"=20'

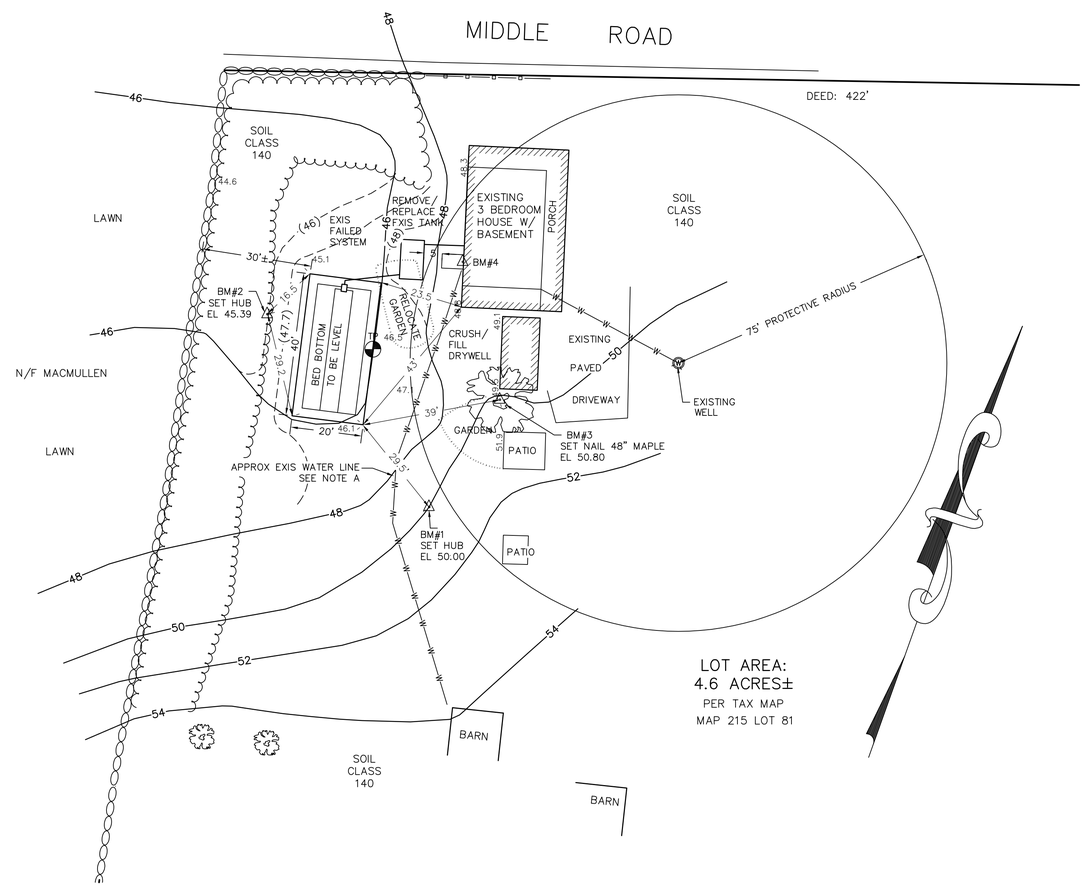

SYSTEM OWNER IS RESPONSIBLE FOR THE FOLLOWING OPERATING REQUIREMENTS

ENV–WS 1023.01 (a) SEPTIC TANKS SHALL BE INSPECTED FOR ACCUMULATION OF SLUDGE AND SURFACE SCUM AT LEAST ONCE EVERY YEAR. (b) WHEN THE COMBINED THICKNESS OF SLUDGE AND SURFACE SCUM EQUAL 1/3 OR MORE OF THE TANK DEPTH, THE TANK SHALL BE PUMPED BY A LICENSED SEPTIC TANK PUMPER.

ENV–WS 1023.02 TO PREVENT OBSTRUCTION OF THE DISTRIBUTION LINES AND LEACH FIELD, GREASE AND BULKY WASTE SHALL NOT BE FLUSHED OR OTHERWISE INTRODUCED INTO THE SEPTIC SYSTEM.

ENV–WS 1023.03 TOXIC AND HAZARDOUS MATERIALS SHALL NOT BE FLUSHED OR OTHERWISE INTRODUCED INTO THE SEPTIC SYSTEM.

ENV–WS 1023.04 TO PREVENT DAMAGE TO THE DISTRIBUTION LINES AND LEACH FIELD, VEHICLES, LIVESTOCK, AND OTHER HEAVY OBJECTS SHALL NOT BE ALLOWED ON THE LEACH FIELD.

ENV–WS 1023.05 IF WET AREAS APPEAR ON THE GROUND SURFACE ABOVE THE DISTRIBUTION LINES OR LEACH FIELD OR IF DISAGREEABLE ODORS OCCUR, THE SYSTEM SHALL BE INSPECTED FOR THE SOURCE OF THESE PROBLEMS, AND CORRECTIVE ACTION SHALL BE TAKEN.

TEST PIT DATA

DATE: JULY 5, 2017

TOWN INSPECTOR: MIKE CUOMO

TEST PIT #1 ELEV 46.0

0 –8" 10YR3/2 FINE SANDY LOAM, FRIABLE GRANULAR
8–28" 10YR5/4 FINE SANDY LOAM, FRIABLE BLOCKY
28–60" 2.5Y4/4 LOAMY SAND, FIRM BLOCKY W/ REDOX

ESHWT AT 28", NO OBSERVED WATER, NO REFUSAL, ROOTS TO 3'

PERC TEST DATA

DESIGN PERC RATE: 7 MIN/IN

DESIGN LOADING: EXISTING 3 BEDROOM HOUSE

AREA REQUIRED: 712 SF REQUIRED

AREA PROPOSED: 20' X 40' = 800 SF PROVIDED

APPROVED 3 Aug 2017
Town of Brentwood
Septic System Examiner
Notice: Brentwood requires a basal area inspection. Call RCCD 48 hours in advance at 679-2790 to schedule. *Michael Cuomo*

PROPOSED REPLACEMENT

SEPTIC SYSTEM PLAN

EXISTING FAILED SYSTEM

LOCUS: 310 MIDDLE ROAD
BRENTWOOD, NH
TAX MAP 215 LOT 81

OWNER: THE N&V LEMOINE FAMILY REV TRUST OF 2012
NORMAN AND VIVIANNE LEMOINE TRUSTEES
310 MIDDLE ROAD
BRENTWOOD, NH 03833

NEW HAMPSHIRE Designer of Subsurface Disposal Systems ★★★ Anne W. Bialobrzeski No. 348 Department of Environmental Services

APPLICANT:
STOCKTON SERVICES
PO BOX 1306
HAMPTON, NH 03843–1306
603 929–7404

DATE: JULY 26, 2017

APPROVAL:

REVIEWED AND APPROVED IN ACCORDANCE WITH THE RULES AND REGULATIONS OF NH DEPT OF ENVIRONMENTAL SERVICES WATER DIVISION
Eric Hamer
Date: 8/18/2017
#eCA2017081806